Bourdon Tube Pressure Gauge
Aluminium case, wetted parts in st.st.
Type 01.08 - DS 250

01.08

These instruments are designed for use in food, beverage, pharmaceutical, cryogenic, chemical and petrochemical processing industries, and in conventional and nuclear power plants, built to resist the most severe operating conditions, to measure gaseous or liquid media which do not have high viscosity or do not crystallize.

Functional and constructive characteristics

01.08.1 - Bourdon tube pressure gauge - Aluminium case

Accuracy: 1,0 as per EN 837-1
Ambient temperature: -25...+65 °C.
Process temperature: -40...+150 °C.
Working pressure: max 90% of F.S.V. for pulsating pressures; 100% of F.S.V. for static pressure.
Temporary overpressure: 30% of F.S.V.
Protection degree: IP 55 as per IEC 529.
Socket material: AISI 316L.
Elastic element: AISI 316L st.st. seamless tube.
Welding: AISI 316 TIG.
Case: black painted aluminium.
Ring: black painted aluminium.
Window: Plexiglas.
Movement: stainless steel with bushing.
Dial: aluminium, white with black markings.
Pointer: black painted aluminium
Window gasket: synthetic rubber.
Blow out vent: polychlorprene.

RANGES

Ranges	bar	kg/cm^2	kPa	MPa
0...1	✦	✦		✦
0...1,6	✦	✦		✦
0...2,5	✦	✦		✦
0...4	✦	✦		✦
0...6	✦	✦		✦
0...10	✦	✦		✦
0...16	✦	✦		✦
0...25	✦	✦		✦
0...40	✦	✦		✦
0...60	✦	✦		✦
0...100	✦	✦	✦	✦
0...160	✦	✦	✦	
0...250	✦	✦	✦	
0...400	✦	✦	✦	
0...600	✦	✦	✦	
0...1000	✦	✦	✦	
0...1600			✦	
0...2500			✦	

Ranges	psi
0...60	✦
0...100	✦
0...300	✦
0...400	✦
0...600	✦
0...1000	✦
0...1600	✦

Bourdon Tube Pressure Gauge - Aluminium case , wetted parts in st.st.
Type 01.08 - DS 250

REV. 00 E 10/00

IN ORDER TO IMPROVE THEIR PRODUCTION, MESSRS. LEITENBERGER RESERVE THE RIGHT TO THEMSELVES TO MAKE ALL THE MODIFICATIONS THAT THEY DEEM INDISPENSABLE AT ANY TIME. UPDATED DATA-SHEETS ARE AVAILABLE ON SITE: www.Leitenberger.de

TYPES, WEIGHT AND DIMENSIONS

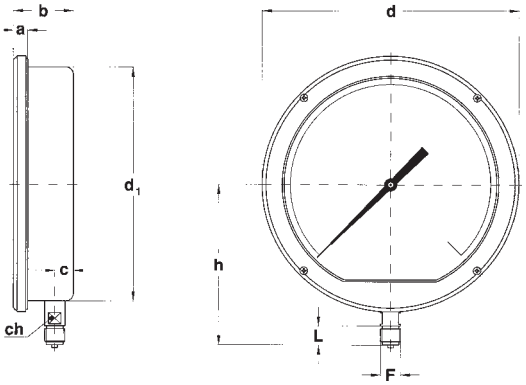

TYPE A
stem mounting;
lower connection.

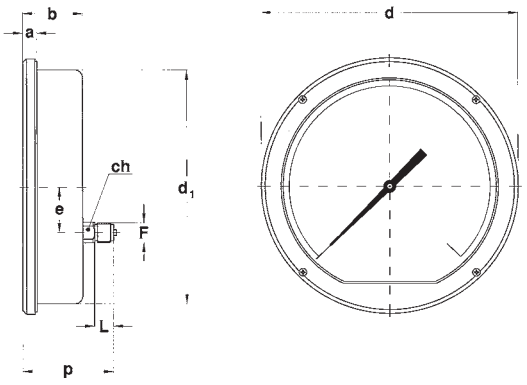

TYPE D
stem mounting;
back connection.

F	Type	a	b	c	d	d_1	e	h	p	ch	L	Weight
1/2″ BSP or NPT	A	15	63	19,5	270	247		170		17	20	3,1 Kg.
1/2″ BSP or NPT	D	15	63		270	247	47,8		95,5	22	20	3,25 Kg.

HOW TO ORDER

	CODE & DESCRIPTION
01	01- Bourdon Tube Pressure Gauge
08	08 - type
1	1 - standard version
A	A - lower connection D - back connection
I	I - DN 250
2	1 - up to 2,5 bar 2 - from 4 to 40 bar 3 - above 40 bar
0/100 bar	see ranges tables
43M	41M - 1/2" BSP M 43M - 1/2" NPT M
K06	see options table

OPTIONS

DESCRIPTION	CODE
Accuracy class 0,6 as per EN 837-1 (1)	**K06**
Dial tagging	**SQ1**
St.St. tag label wired to socket	**T25**
St.St. restrictor ø 0,7 mm.	**V11**

(1) Available from 0...2,5 to 0...400 bar only

DRUCK & TEMPERATUR Leitenberger GmbH
Postfach 64 • D-72136 Kirchentellinsfurt • Germany
Tel.: 0 71 21 - 9 09 20 - 0 • Fax: 0 71 21 - 9 09 20 - 99
E-Mail: dt-info@leitenberger.de
INTERNET-Site: http://www.leitenberger.de